Assembly | Asamblea | Assemblage

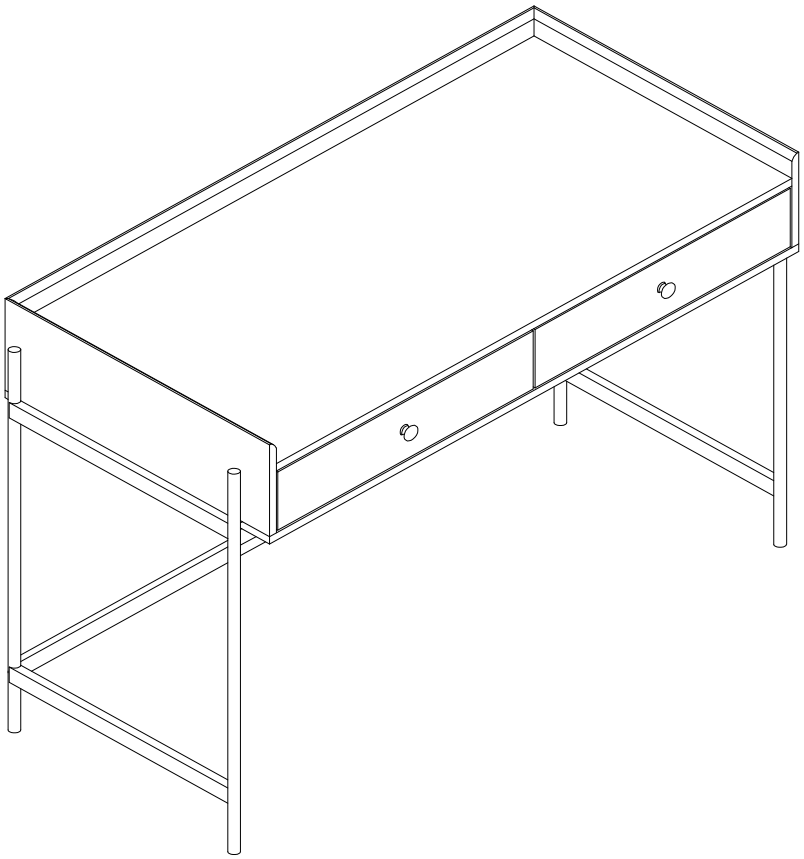

Thank you for your purchase! | ¡Gracias por tu compra! | Merci pour votre achat!

Assembly | Asamblea | Assemblage

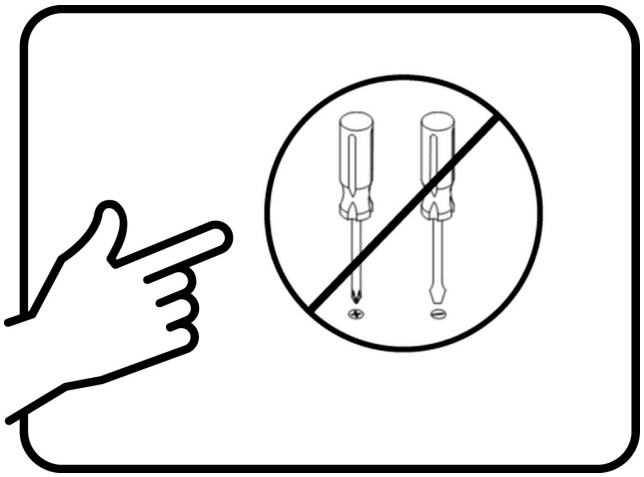

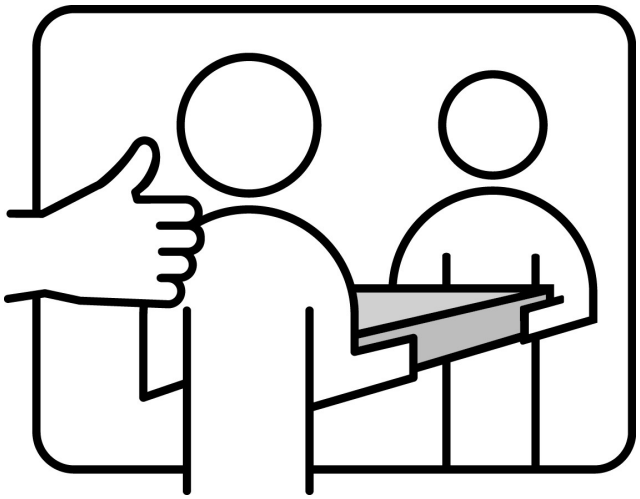

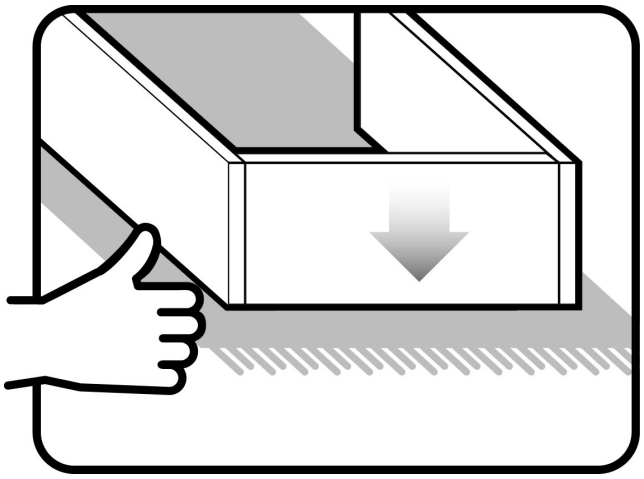

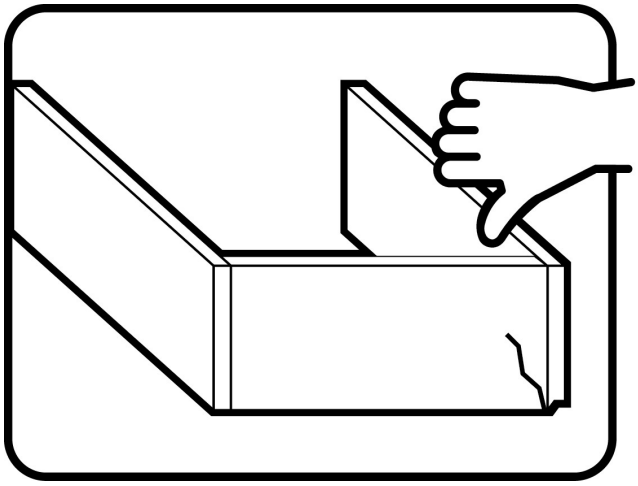

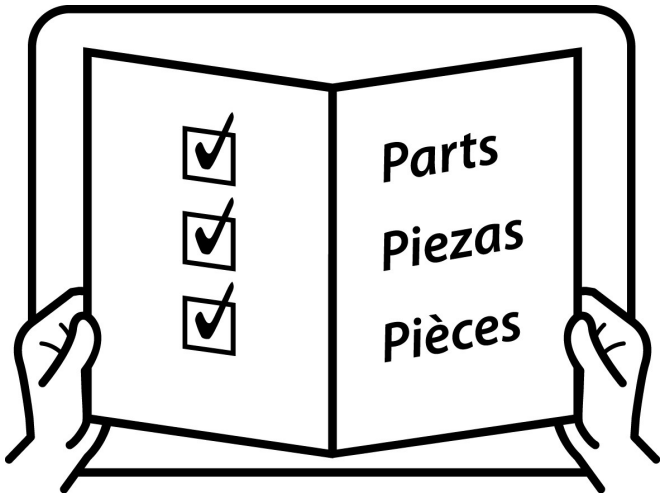

Assembly | Asamblea | Assemblage

Techniques | Técnicas | Techniques

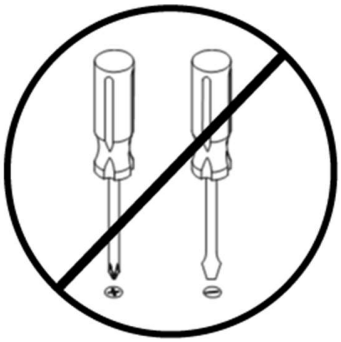

Care | Cuidado | Entretien

Safety | Seguridad | Sécurité

Note! | ¡Nota! | Remarque!

Assembly | Asamblea | Assemblage

A x1 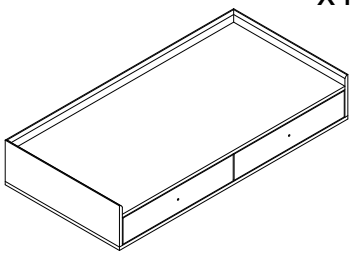 Top Panel	B x1 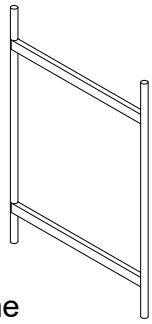 Left frame	C x1 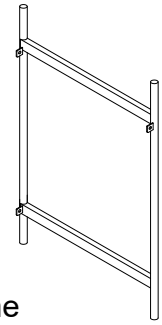 Right frame
D x2 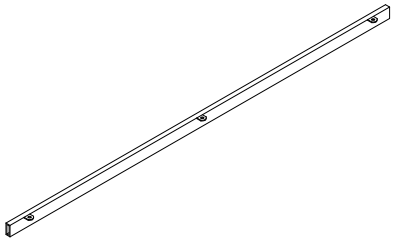 Top connect rail	E x1 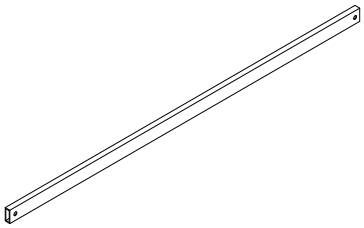 Bottom connect rail	

Assembly | Asamblea | Assemblage

1 x18 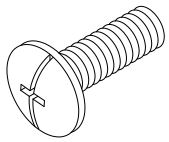 Bolt	2 x18 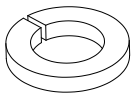 Spring Washer	3 x18 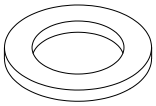 Flat Washer
4 x2 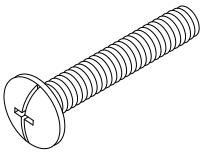 Bolt for Handle	5 x2 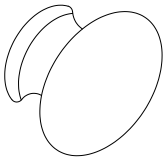 Handle	6 x4 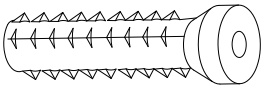 Anchor
7 x4 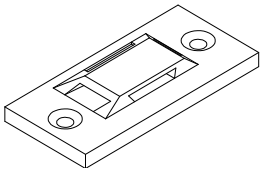 Bracket	8 x4 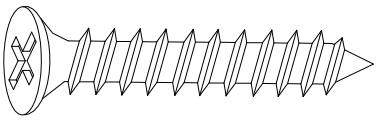 Screw ϕ1/4"x38mm	9 x2 Tie
10 x4 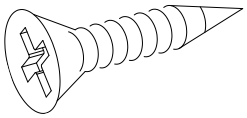 Screw		

Assembly | Asamblea | Assemblage

1

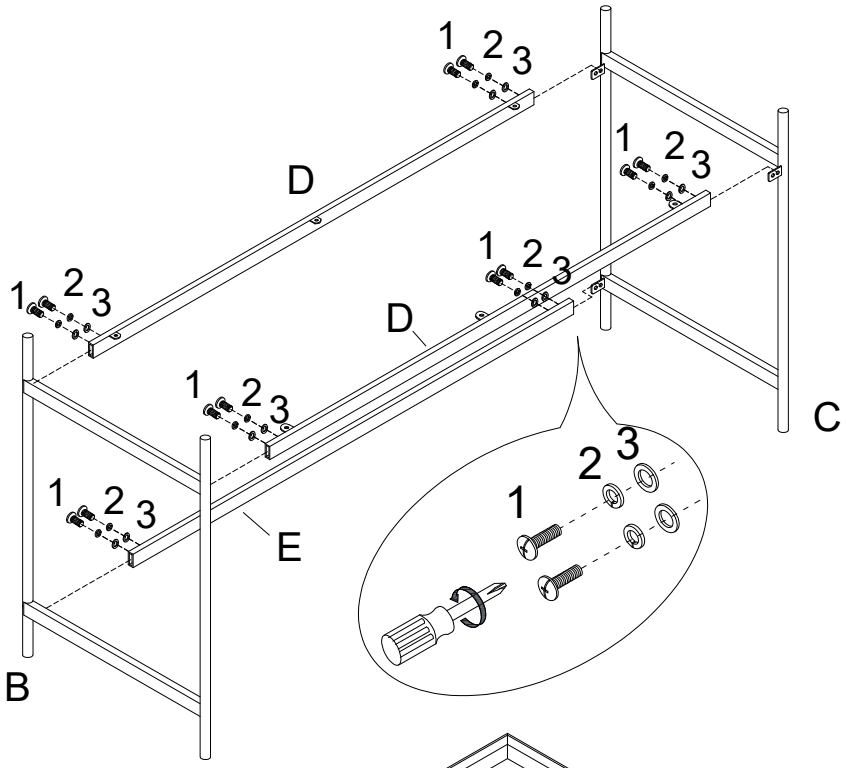

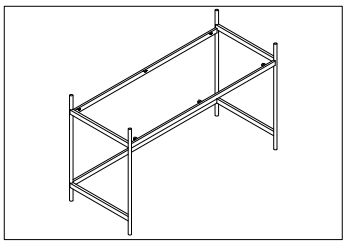

2

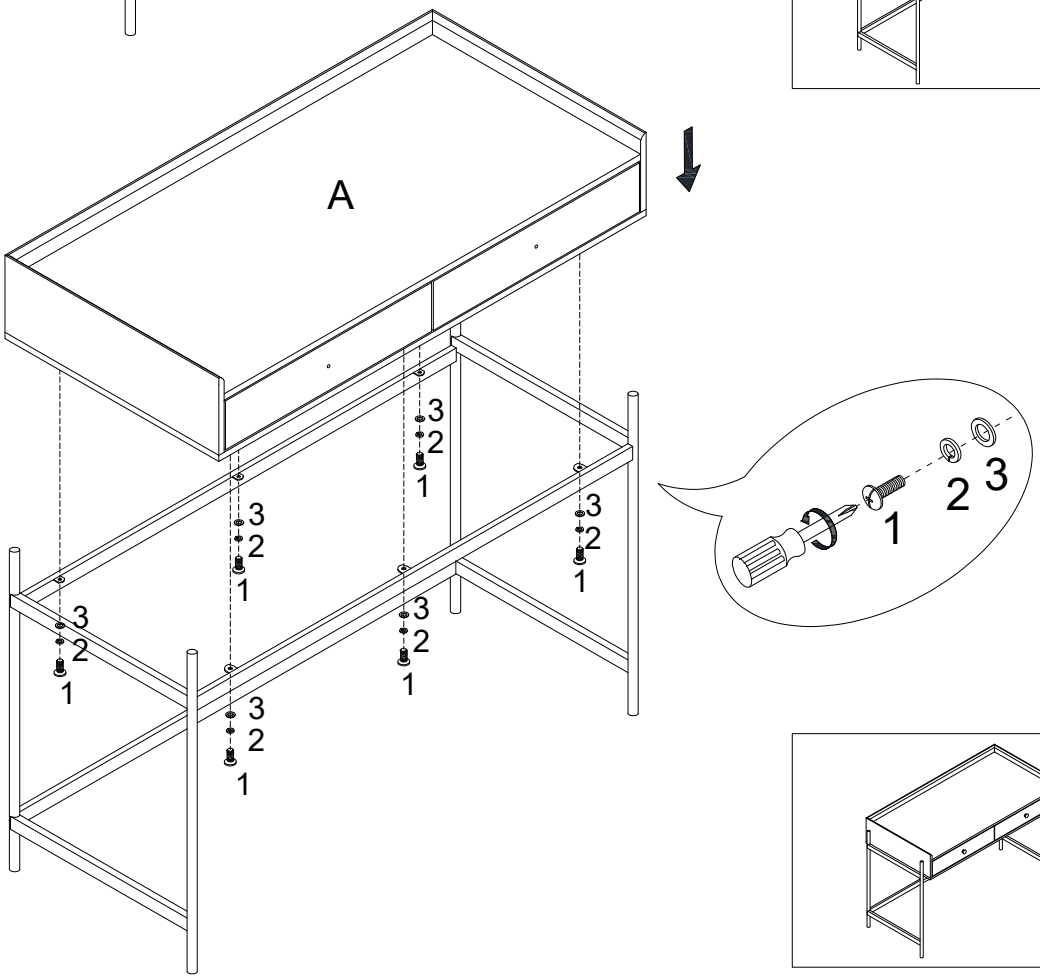

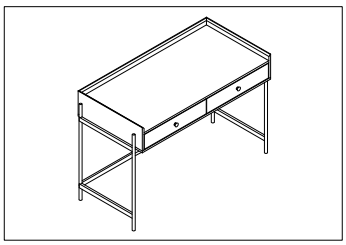

Assembly | Asamblea | Assemblage

3

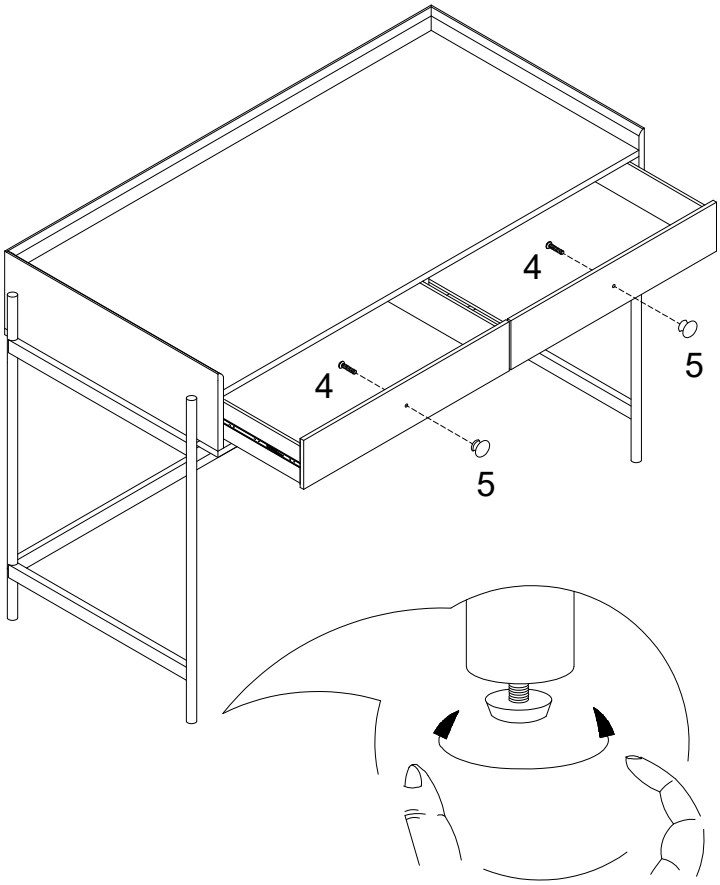

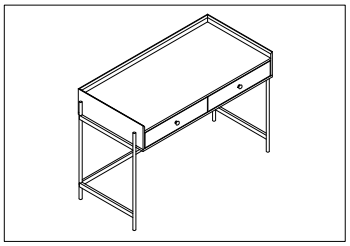

4

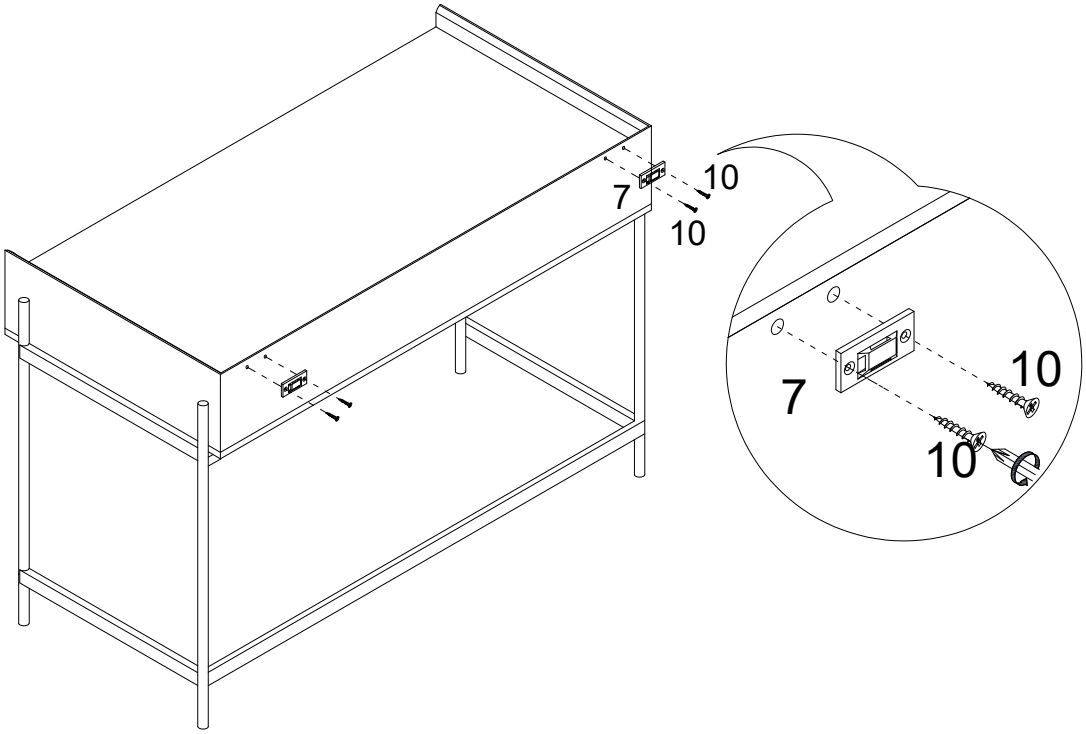

Assembly | Asamblea | Assemblage

5

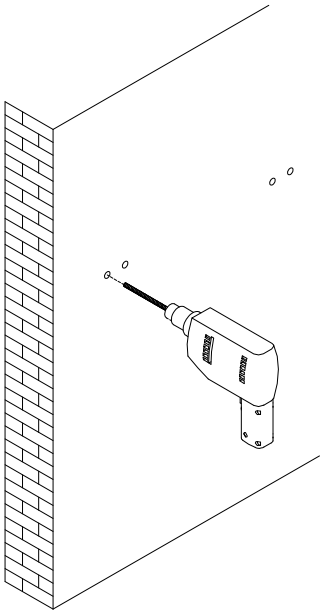

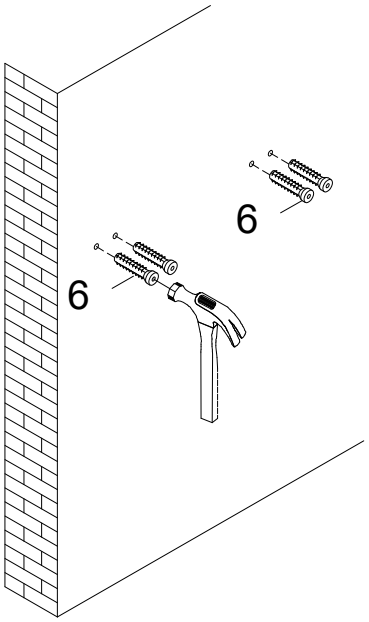

6

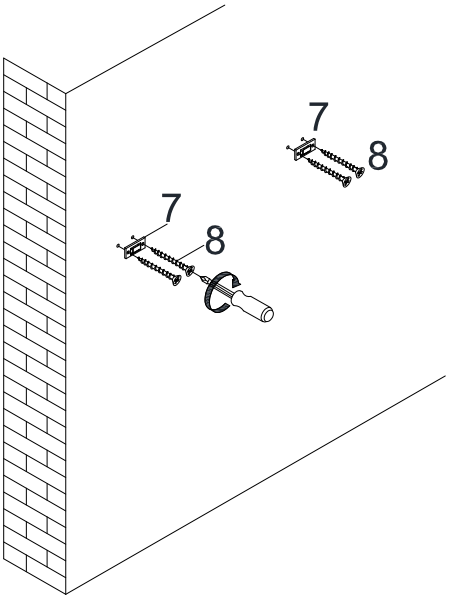

Assembly | Asamblea | Assemblage

7

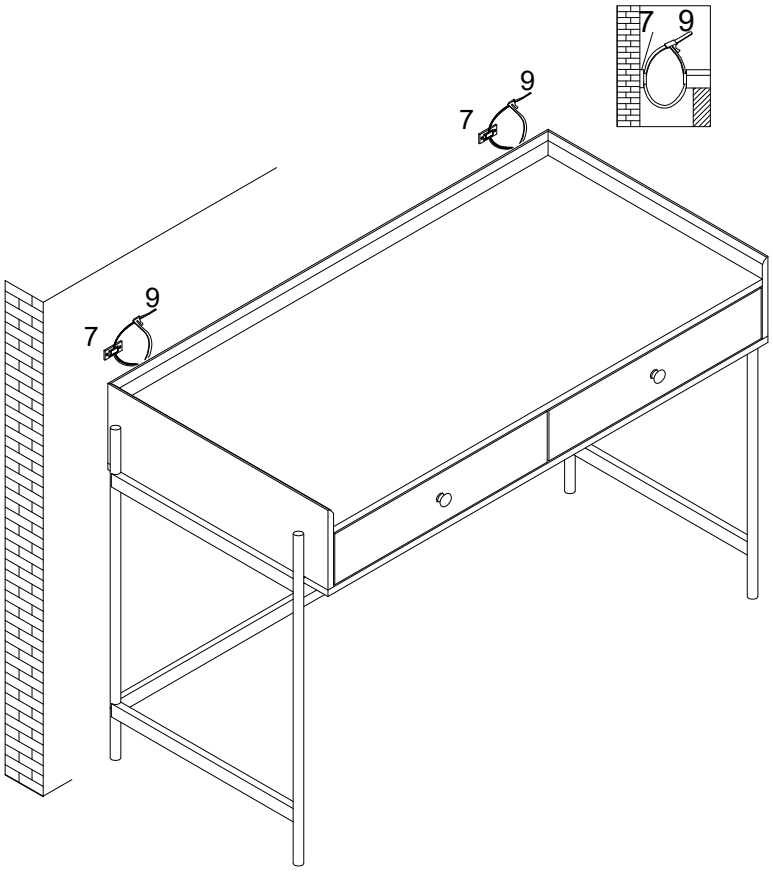
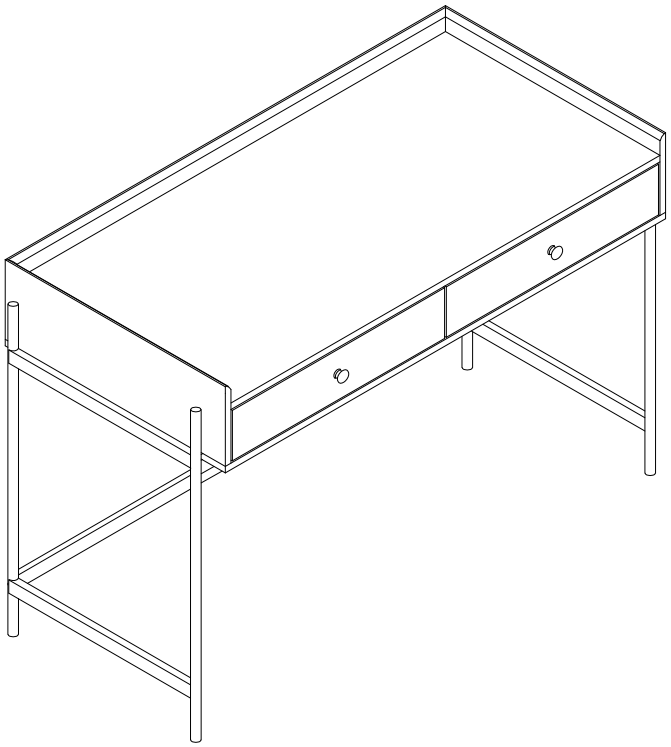
8