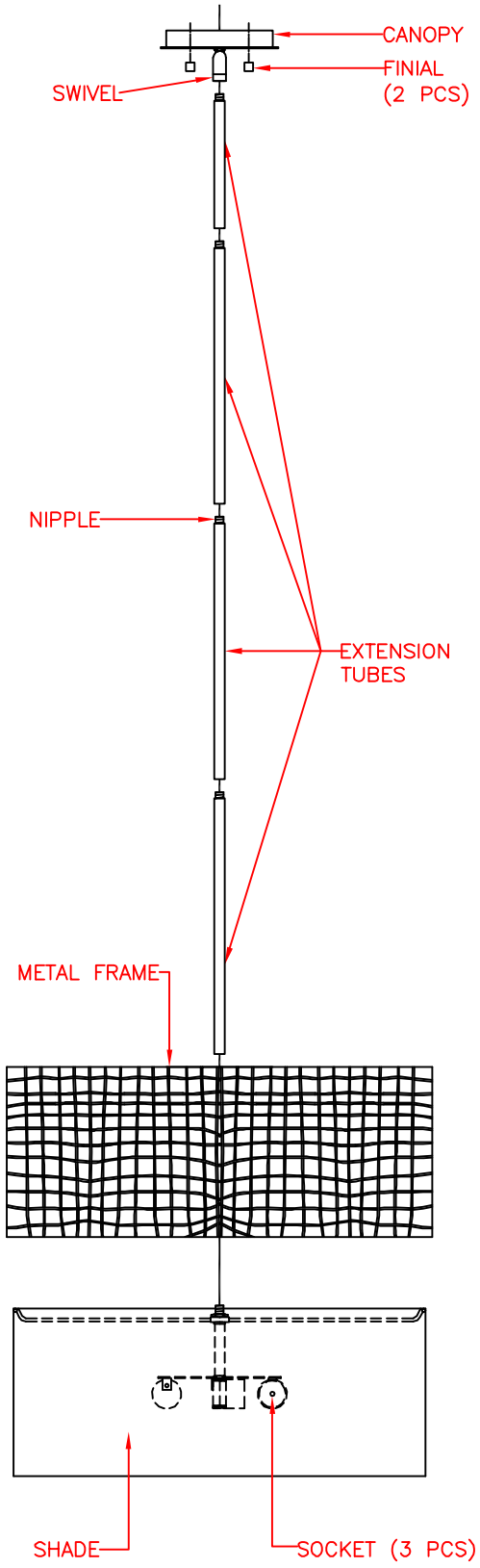

ASSEMBLY INSTRUCTIONS

READ AND SAVE THESE INSTRUCTIONS

READ INSTRUCTIONS ALL THE WAY THROUGH PRIOR TO ASSEMBLY.

THIS FIXTURE SHOULD TAKE APPROXIMATELY 5 MINUTES TO ASSEMBLE.

MAKE SURE ALL PARTS ARE FIRMLY TIGHTENED.

TOOLS: YOU WILL NEED THE FOLLOWING TOOLS OR EQUIPMENT: LADDER, SCREWDRIVER, ADJUSTABLE WRENCH, WIRE CUTTERS.

UNPACK THE FIXTURE

YOU SHOULD HAVE RECEIVED THE FOLLOWING:
CANOPY WITH SWIVEL, (3) 12" AND (1) 6" EXTENSION TUBES, METAL FRAME AND SHADE. TO PROTECT THE FINISH, PLACE ALL PARTS ON A SOFT SURFACE.

MOUNTING HARDWARE PACKAGE:
(4) 8–32 x 1–1/4" SCREWS, (2) NUTS, MOUNTING PLATE, GREEN GROUND SCREW, (3) WIRE CONNECTORS AND (2) FINIALS.

FIXTURE ASSEMBLY

1. PLACE METAL FRAME OVER THE SHADE.

2. FEED WIRE UP THROUGH TUBING AND WORKING UPWARDS TOWARD CANOPY AS SHOWN.

3. SCREW EXTENSION TUBE TO TOP OF THE SHADE. (USE ANY SINGLE LENGTH OF EXTENSION TUBE OR CONNECT TUBE SECTIONS TOGETHER TO OBTAIN DESIRED LENGTH, REMOVE NIPPLE FROM EXTENSION TUBE IF NEEDED.)

4. SCREW EXTENSION TUBE TO SWIVEL ON CANOPY.

****STOP** COMPLETE INSTALLATION INSTRUCTIONS ON NEXT PAGE BEFORE PROCEEDING.**

FINAL ASSEMBLY

1. INSTALL A 60 WATT MAX. MEDIUM BASE TYPE "A" BULB (NOT INCLUDED) INTO EACH SOCKET.

2. RESTORE POWER. YOUR FIXTURE IS NOW READY FOR USE.

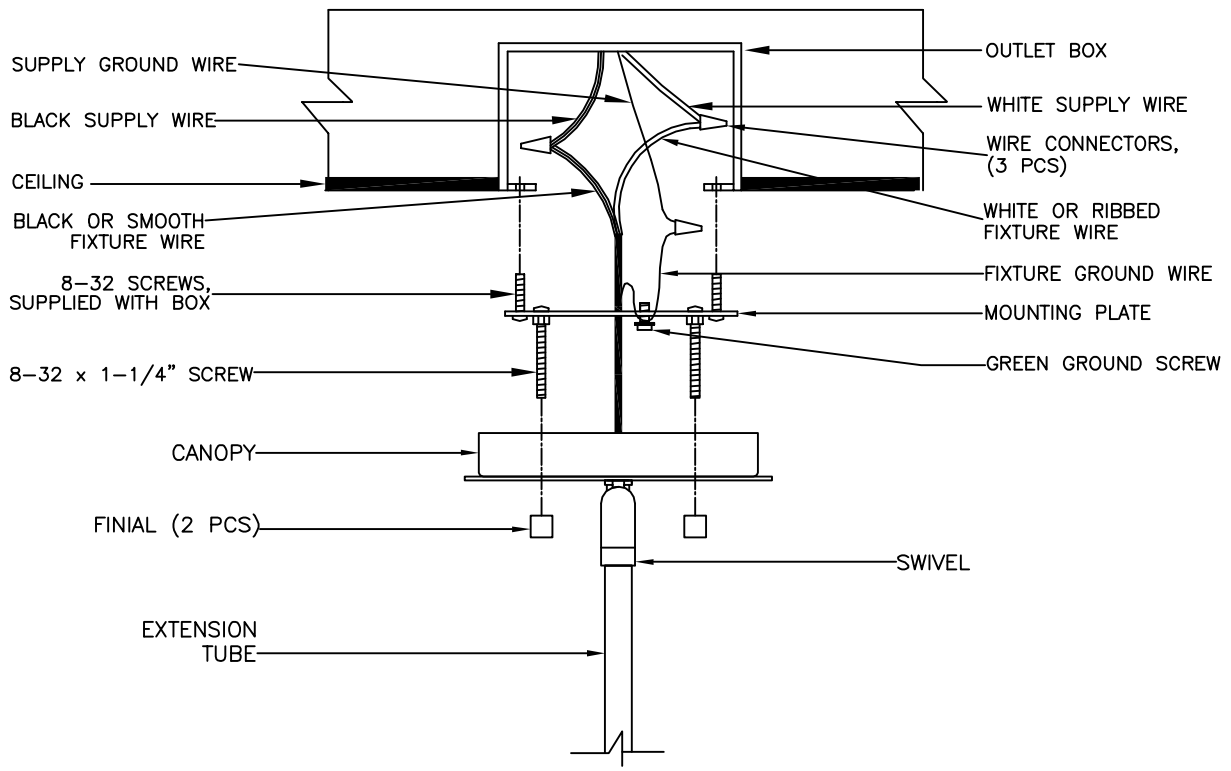

INSTALLATION INSTRUCTIONS

READ AND SAVE THESE INSTRUCTIONS

CAUTION

TO AVOID POSSIBLE ELECTRIC SHOCK, MAKE SURE THE ELECTRICITY IS SHUT OFF AT THE MAIN PANEL. IF YOU ARE REPLACING AN EXISTING FIXTURE, FIRSTLY, TURN THE FIXTURE OFF. NEXT, TURN THE WALL SWITCH OFF. FINALLY, GO TO THE MAIN FUSE OR BREAKER BOX IN YOUR HOME. TURN THE FUSE OR BREAKER TO THE OFF POSITION. SOME TYPES OF FUSES MUST BE UNSCREWED TO SHUT OFF THE POWER.

* ALL WIRING MUST BE DONE IN ACCORDANCE WITH NATIONAL AND LOCAL ELECTRIC CODES.

** IF YOU ARE NOT FAMILIAR WITH WIRING, YOU SHOULD USE A QUALIFIED ELECTRICIAN.

*** THIS FIXTURE IS INTENDED TO BE MOUNTED TO A UL LISTED OUTLET BOX CAPABLE OF SUPPORTING THE FIXTURE.

COMPLETE FIXTURE ASSEMBLY INSTRUCTIONS FIRST (SEE PREVIOUS).

1. SCREW (2) 8–32 x 1–1/4" SCREWS INTO THE MOUNTING PLATE MAKING SURE THAT THEY LINE UP WITH THE HOLES IN THE CANOPY. ATTACH THE MOUNTING PLATE TO THE CEILING OUTLET BOX USING THE TWO SCREWS PROVIDED WITH THE OUTLET BOX. (NOTE: IF THE SCREWS WITH THE OUTLET BOX ARE TOO SHORT, USE THE (2) 8–32 x 1–1/4" SCREWS PROVIDED IN THE MOUNTING HARDWARE PACKAGE).

2. CONNECT THE WHITE OR RIBBED FIXTURE WIRE TO THE WHITE SUPPLY WIRE IN THE OUTLET BOX USING THE TWIST–ON WIRE CONNECTORS PROVIDED. CONNECT THE BLACK OR SMOOTH FIXTURE WIRE TO THE BLACK SUPPLY WIRE IN THE SAME MANNER. INSTALL THE FIXTURE GROUND WIRE UNDER THE GREEN GROUND SCREW ON THE MOUNTING PLATE THEN CONNECT THE FIXTURE GROUND WIRE TO THE SUPPLY GROUND WIRE IN THE OUTLET BOX USING THE TWIST–ON WIRE CONNECTOR PROVIDED.

3. TUCK THE WIRES CAREFULLY INSIDE THE OUTLET BOX. SPREAD THE ELECTRICAL SPLICES SO THAT THE BLACK WIRES ARE ON ONE SIDE OF THE OUTLET BOX AND THE WHITE WIRES ARE ON THE OTHER SIDE.

4. RAISE THE FIXTURE TO THE CEILING AND SECURE IN PLACE WITH (2) FINIALS.

5. SEE PREVIOUS PAGE FOR FINAL ASSEMBLY INSTRUCTIONS.