Leg Installation
-Pin Style Legs-

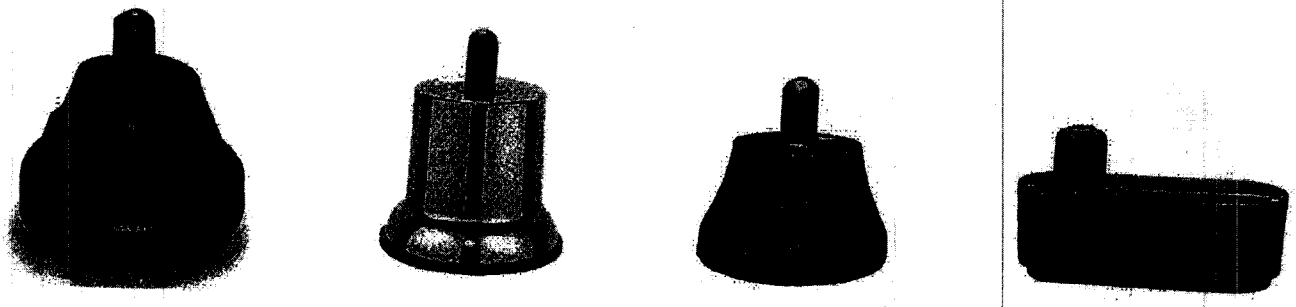

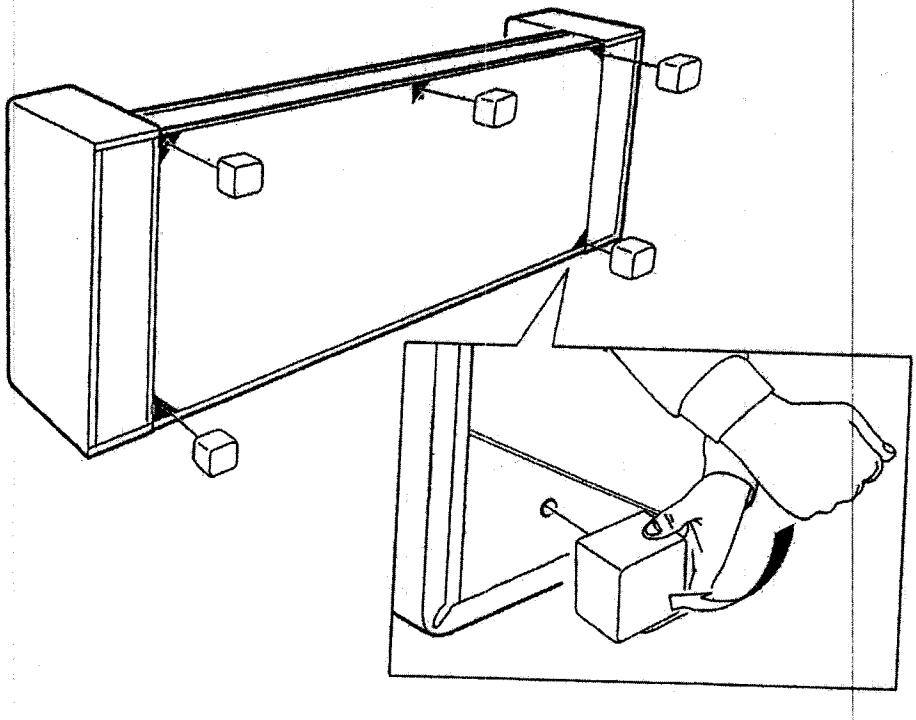

Installation Instuctions
Montageanleitung
Montaj Talimatları

EMPIRE FURNITURE USA