①

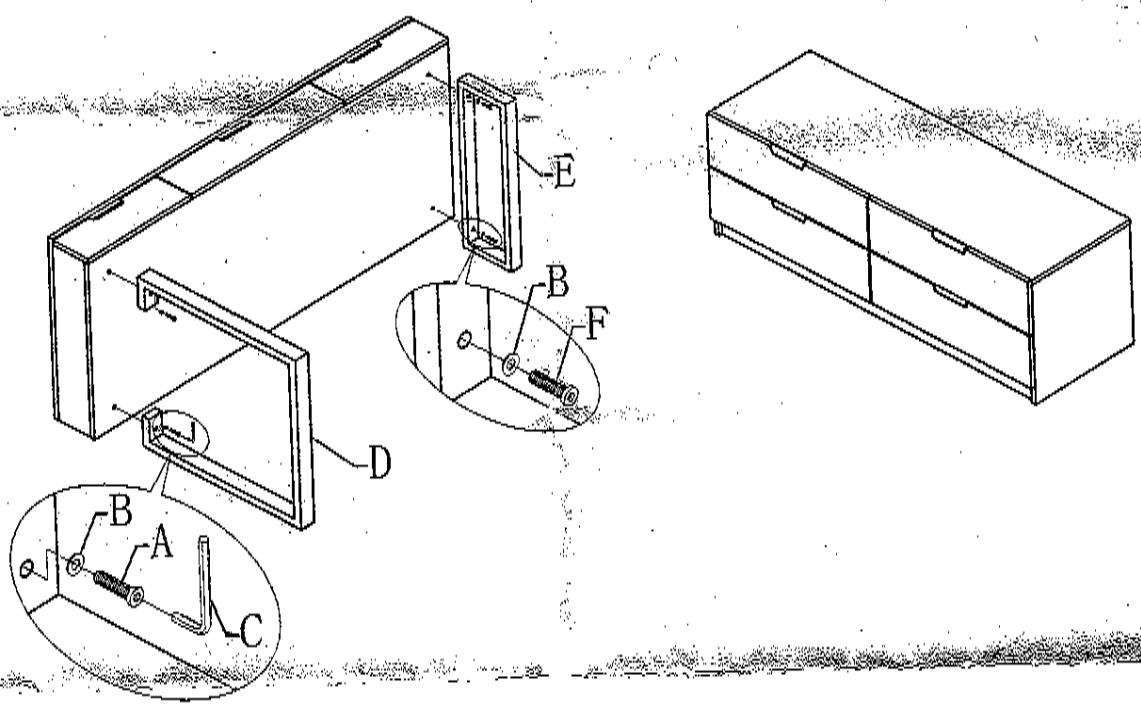

A=2
B=4
C=1

D=1
E=1
F=2

②

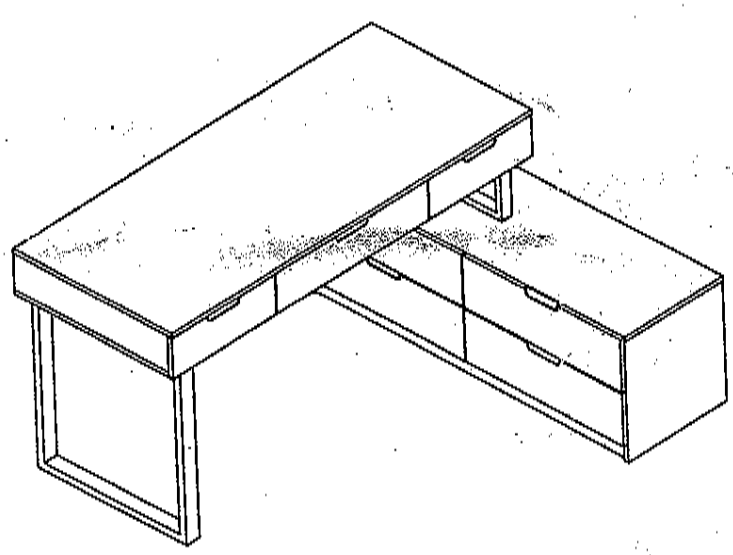

CODE	PICTURE	QTY
A	M8*35mm	2
B	Φ19mm	4
C	M5*65mm	1
D	560*50*590mm	1
E	560*40*180mm	1
F	M8*40mm	2